MF029910
Kinnen

All sizes in mm
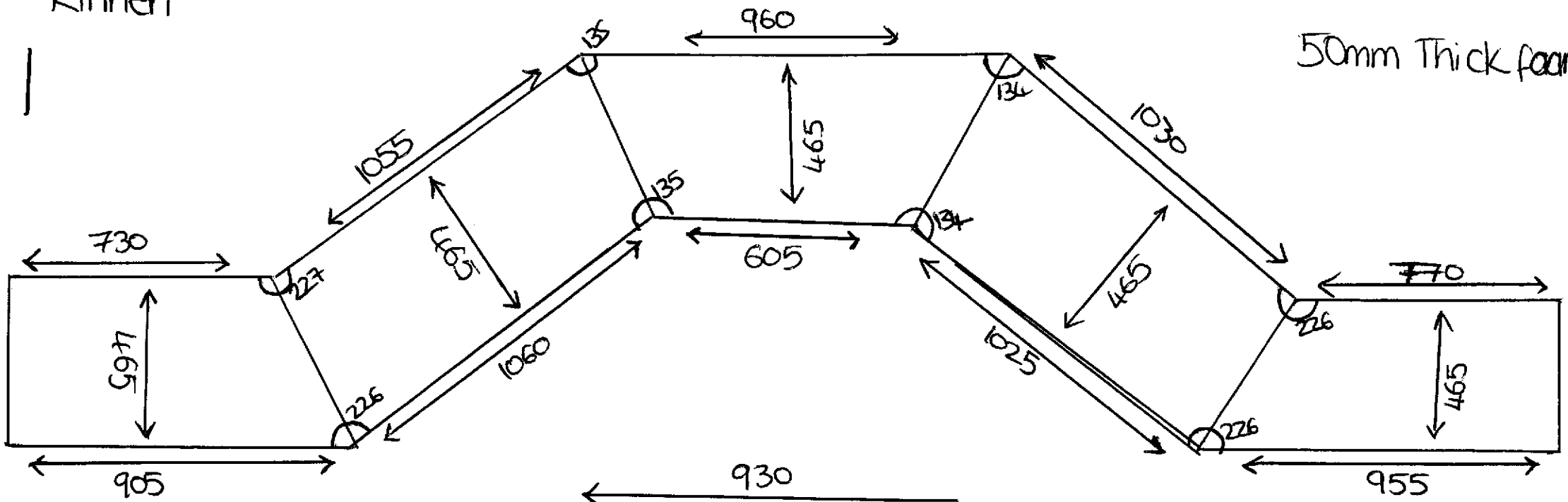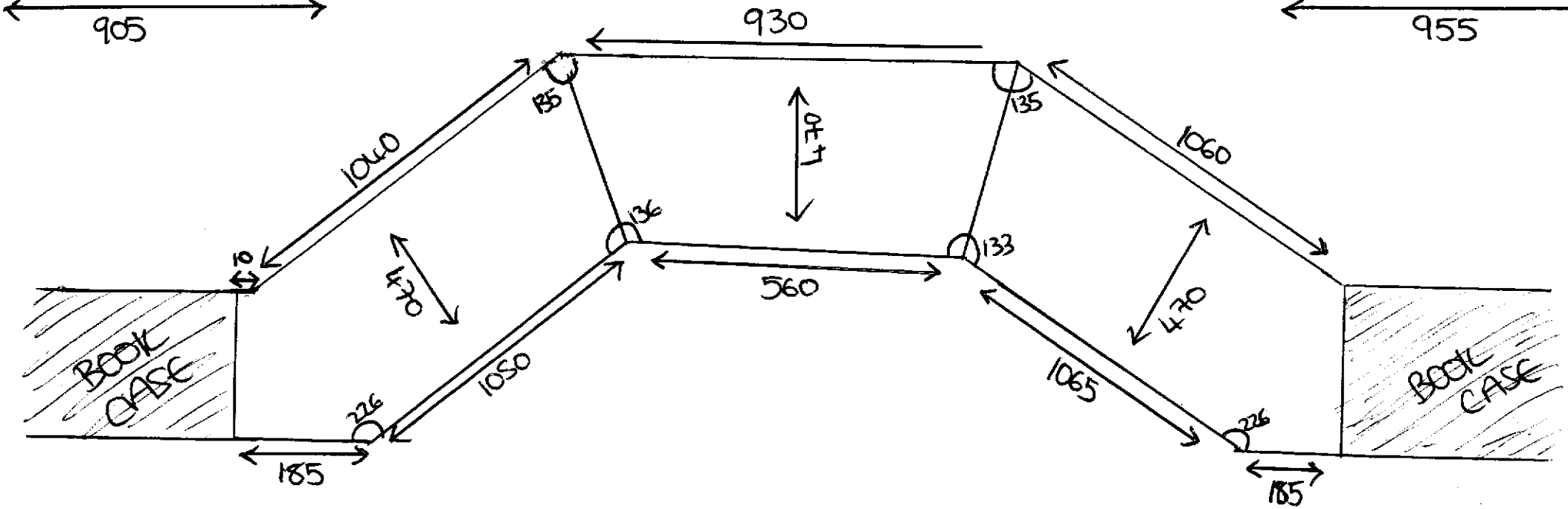
50mm Thick foam