3/4 Plan A Hinge Blos AMIC Manhole

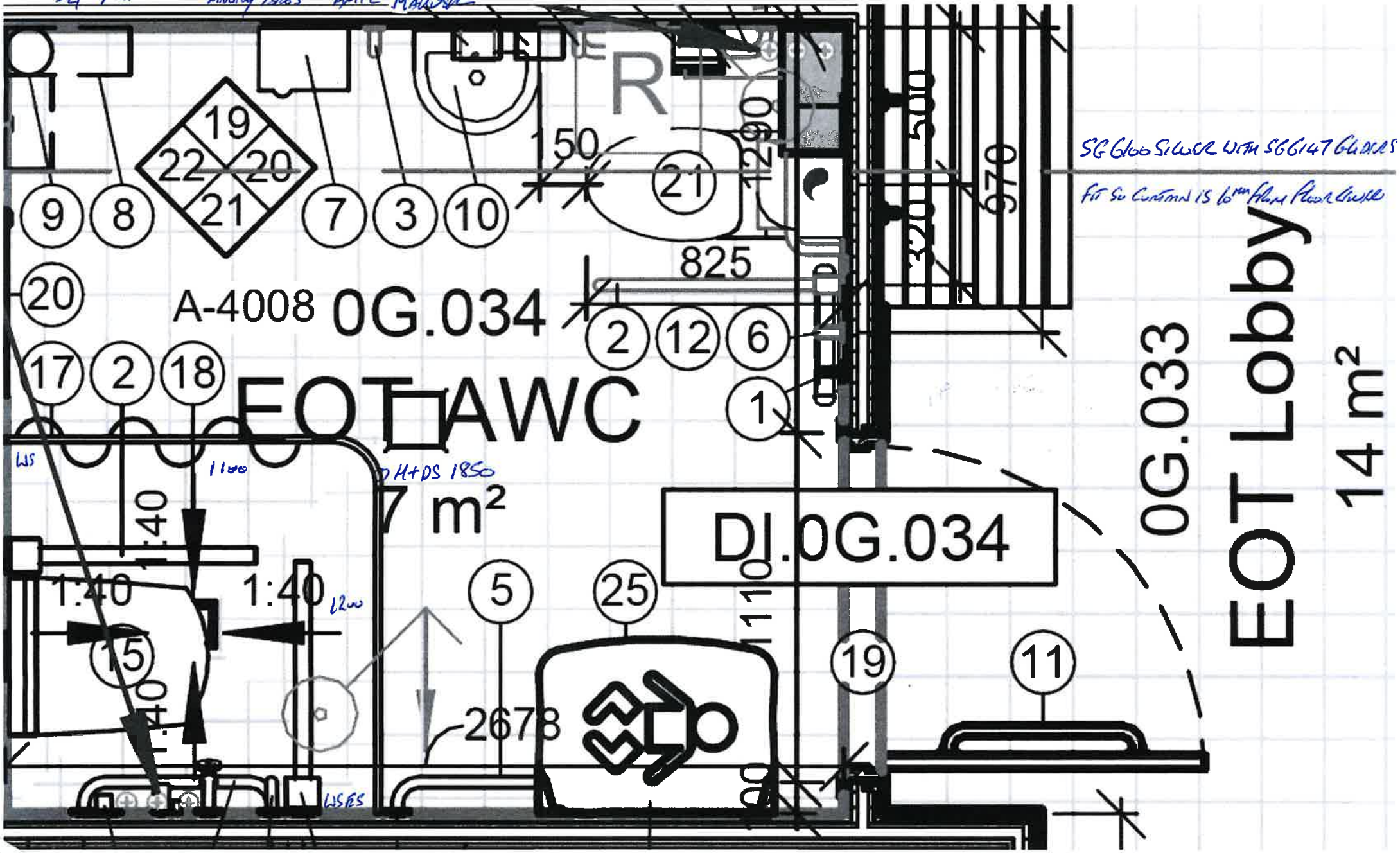

SG Gloo Silver with SG6147 Gloss

Fit Su Cupboard is 60mm Above Floor Level

Floor to Falsecilling 2600

" " Metal Ceiling 3880

(Not To Scale)